Parallax Propeller

P8X32A

Eight 32-bit processors
("cogs") on one chip

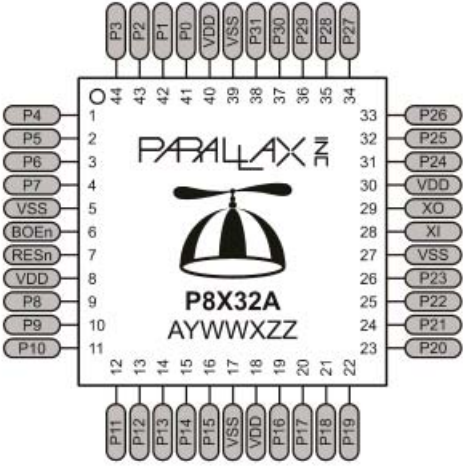

LQFP and QFN Packages

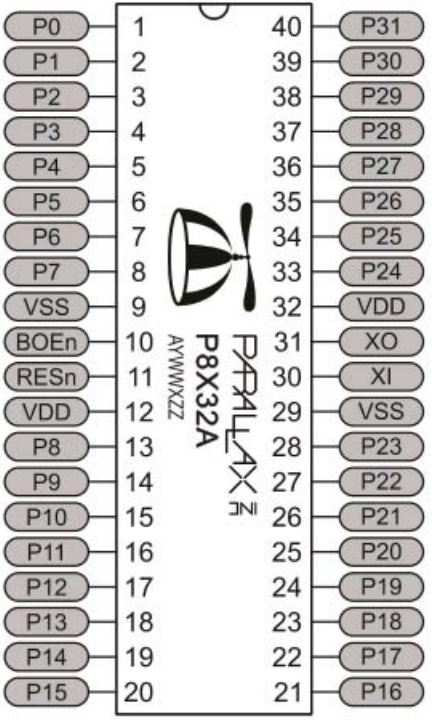

DIP Package

Numbers

- 3.3 V
- ~10 mA/cog @ 80 MHz
- 40 mA max per I/O pin
- 80 MHz clock:
  - 5 MHz xtal x 16 (PLL)
  - 10 MHz xtal x 8 (PLL)
- Each cog runs at 20 MIPS
- 20 MIPS x 8 = 160 MIPS.

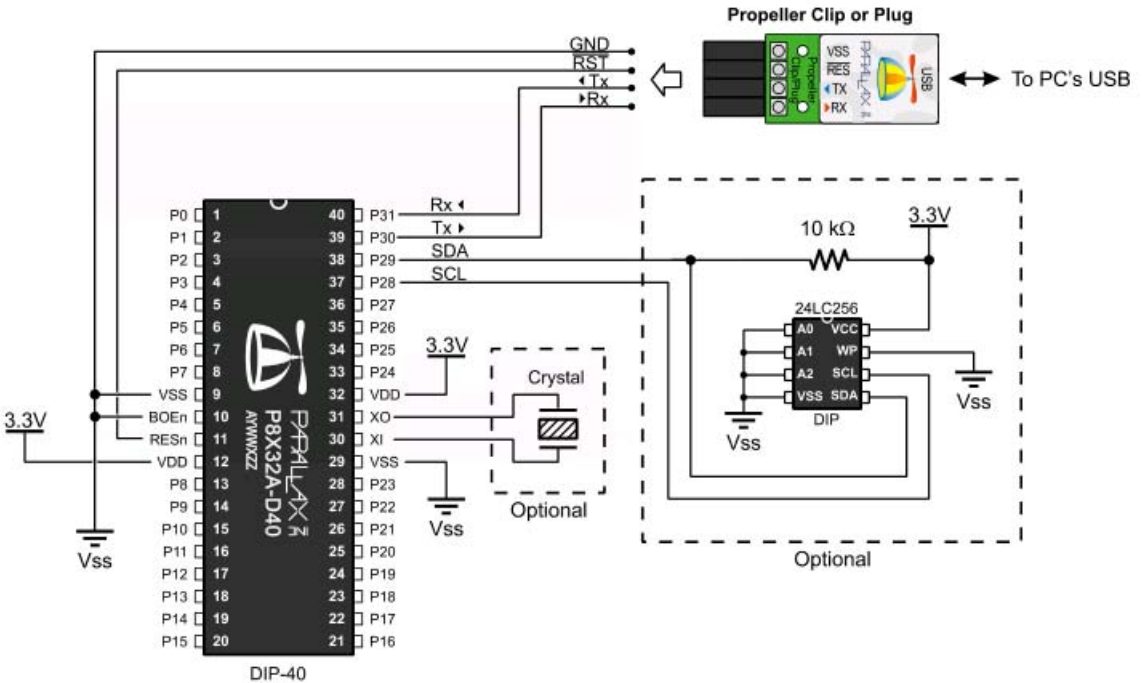
Propeller Clip or Plug
GND
RST
Tx
Rx
VSS
RES
TX
RX
USB
To PC's USB
P0 1
P1 2
P2 3
P3 4
P4 5
P5 6
P6 7
P7 8
VSS 9
BOEn 10
RESn 11
VDD 12
P8 13
P9 14
P10 15
P11 16
P12 17
P13 18
P14 19
P15 20
40 P31
39 P30
38 P29
37 P28
36 P27
35 P26
34 P25
33 P24
32 VDD
31 XO
30 XI
29 VSS
28 P23
27 P22
26 P21
25 P20
24 P19
23 P18
22 P17
21 P16
P8X32A-D40
AYWWZZ
DIP-40
Rx
Tx
SDA
SCL
3.3V
Vss
Crystal
Optional
10 kΩ
24LC256
A0 VCC
A1 WP
A2 SCL
VSS SDA
DIP
Optional

Alternative Serial Programming Circuit

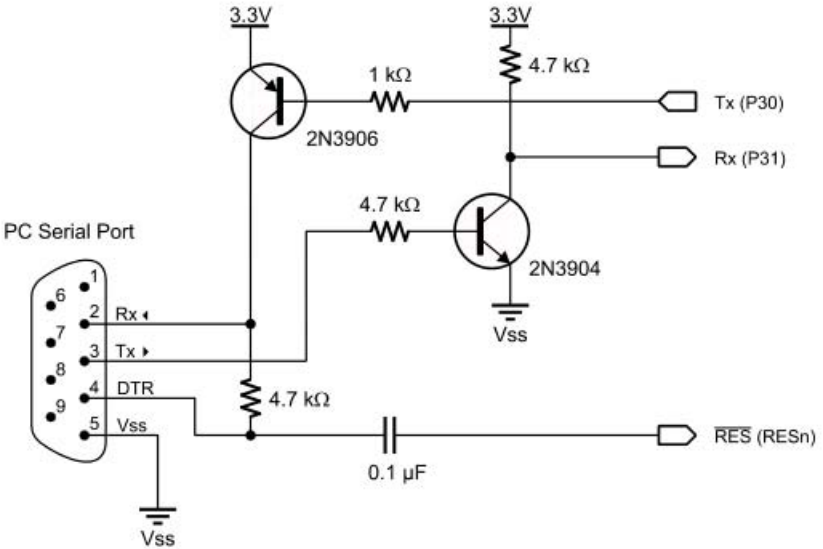

Cog RAM Special Purpose Registers

Cog RAM Map

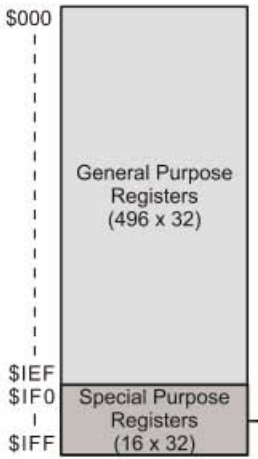

Address	Name	Type	Description
$1F0	PAR	Read-Only[1]	Boot Parameter
$1F1	CNT	Read-Only[1]	System Counter
$1F2	INA	Read-Only[1]	Input States for P31 - P0
$1F3	INB	Read-Only[1]	Input States for P63- P32[2]
$1F4	OUTA	Read/Write	Output States for P31 - P0
$1F5	OUTB	Read/Write	Output States for P63 – P32[2]
$1F6	DIRA	Read/Write	Direction States for P31 - P0
$1F7	DIRB	Read/Write	Direction States for P63 - P32[2]
$1F8	CTRA	Read/Write	Counter A Control
$1F9	CTRB	Read/Write	Counter B Control
$1FA	FRQA	Read/Write	Counter A Frequency
$1FB	FRQB	Read/Write	Counter B Frequency
$1FC	PHSA	Read/Write[1]	Counter A Phase:
$1FD	PHSB	Read/Write[1]	Counter B Phase
$1FE	VCFG	Read/Write	Video Configuration
$1FF	VSCL	Read/Write	Video Scale

Main Memory

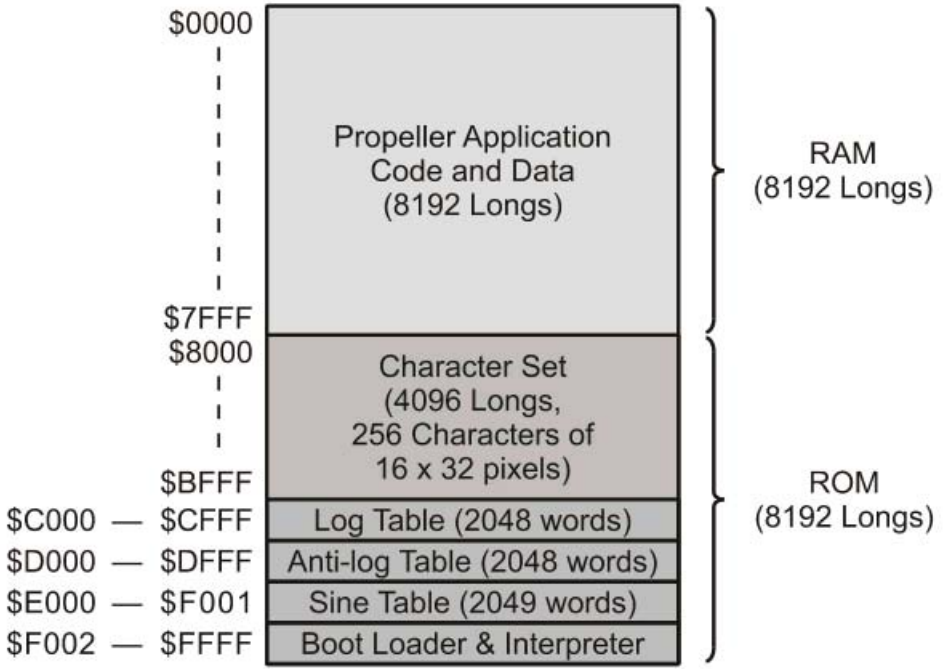
$0000
$7FFF
Propeller Application
Code and Data
(8192 Longs)
RAM
(8192 Longs)
$8000
$BFFF
Character Set
(4096 Longs,
256 Characters of
16 x 32 pixels)
$C000 — $CFFF
Log Table (2048 words)
$D000 — $DFFF
Anti-log Table (2048 words)
$E000 — $F001
Sine Table (2049 words)
$F002 — $FFFF
Boot Loader & Interpreter
ROM
(8192 Longs)

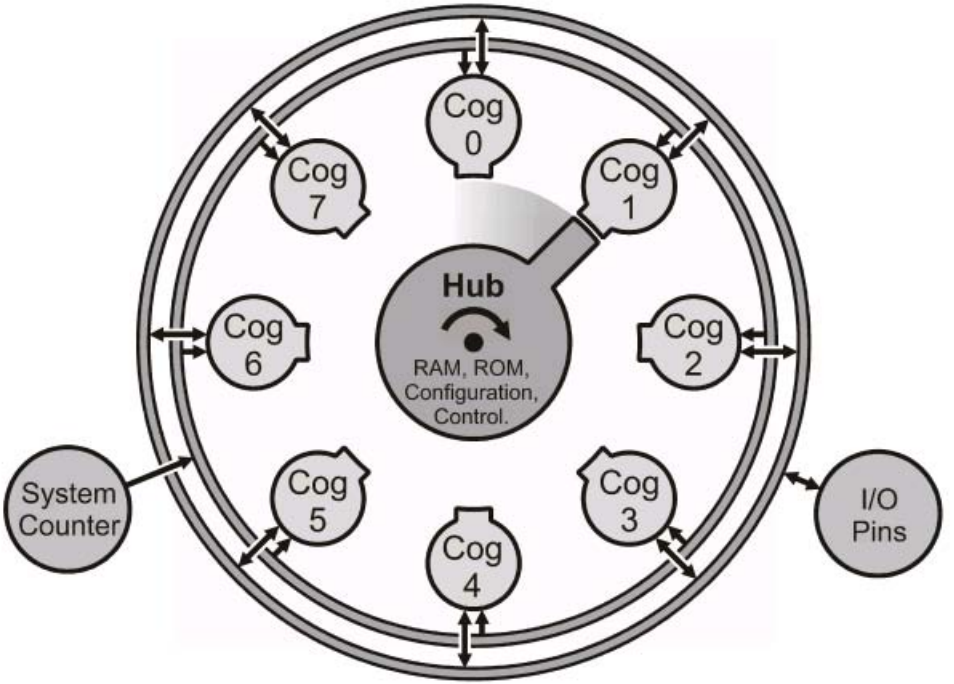

Hub and Cog Interaction

- No interrupts
- Deterministic timing
- All cogs are equal
- All I/Os are equal
- Peripherals are implemented in software, not hardware

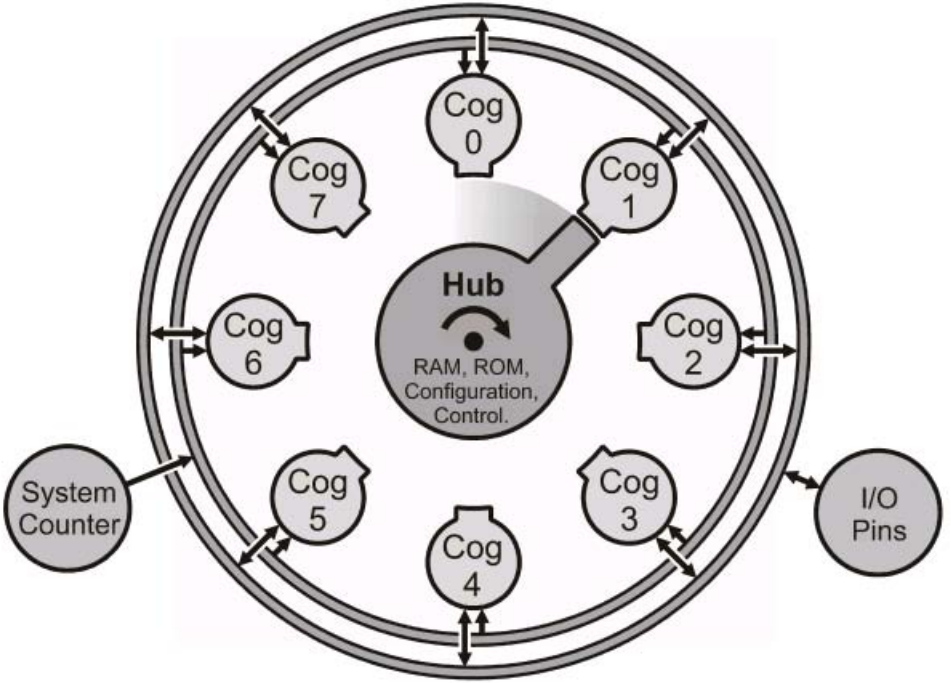
Cog
0
Cog
1
Cog
2
Cog
3
Cog
4
Cog
5
Cog
6
Cog
7
Hub
RAM, ROM,
Configuration,
Control.
System
Counter
I/O
Pins

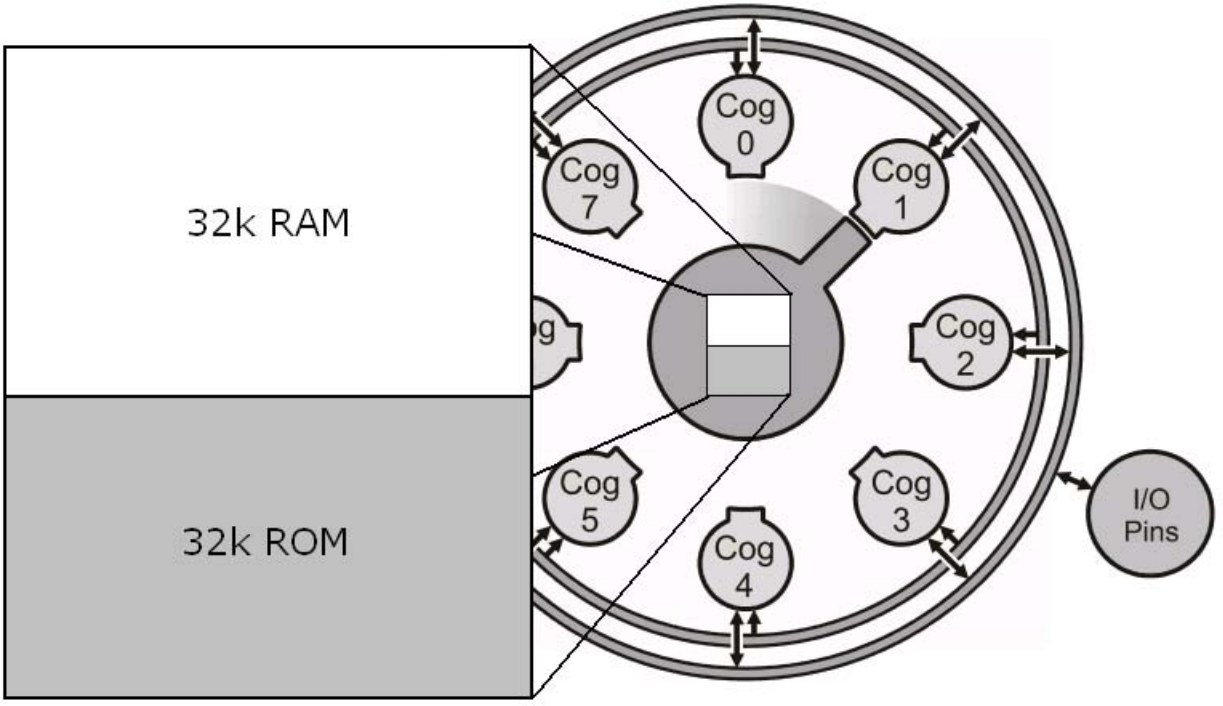
32k RAM
32k ROM
Cog 0
Cog 1
Cog 2
Cog 3
Cog 4
Cog 5
Cog 7
I/O Pins

Propeller Tool - demo03

File Edit Run Help

SingingDemo
VocalTract [
StereoSpati

demo03 | demo04 | demo05 | demo01 | demo02 | MXD2125 Demo | VocalTractDemo_mama | SingingDemo | Inductor

Full Source | Condensed | Summary | Documentation

```
con
_clkmode = xtal1 + pll16x
_xinfreq = 5_000_000

pub Main
  dira[16] := 1                    ' make pin 16 an output
  repeat
    !outa[16]                      ' toggle pin 16
    waitcnt( clkfreq + cnt )       ' wait 1s
```

SingingDe
Graphic
images
Singing
vocal tr
rayman 4

SingingDemo.spin
StereoSpatializer.s
VocalTract.spin

Propeller Sour

10 : 11 Insert

start p.. F.. P.. P.. 2.. I... P.. 1.. P.. 10:39 AM

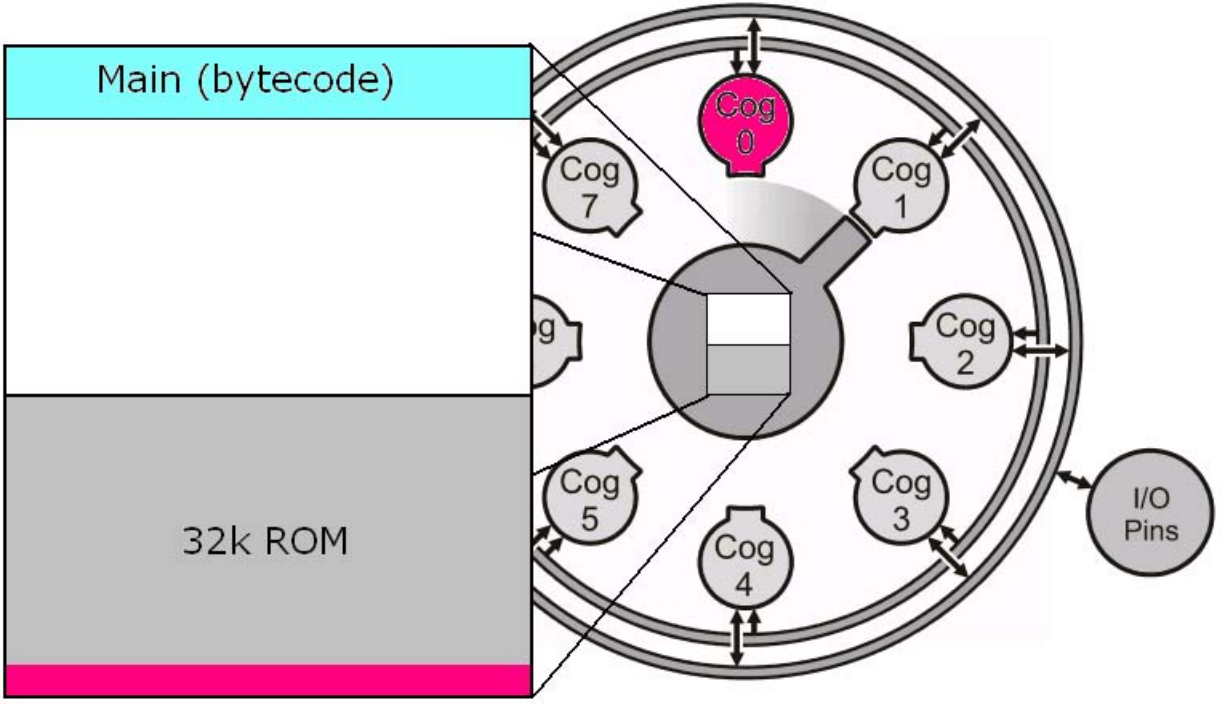
Main (bytecode)
32k ROM
Cog 0
Cog 1
Cog 2
Cog 3
Cog 4
Cog 5
Cog 7
I/O Pins

Propeller Tool - demo04

File Edit Run Help

SingingDemo
VocalTract [
StereoSpati

demo03 | demo04 | demo05 | demo01 | demo02 | MXD2125 Demo | VocalTractDemo_mama | SingingDemo | Inductor

Full Source | Condensed | Summary | Documentation

```
pub Main

  cognew( Blink, @stack )        ' run Blink in another cog
  dira[16] := 1
  repeat
    !outa[16]
    waitcnt( clkfreq + cnt )

pub Blink
  dira[18] := 1
  repeat
    outa[18] := 1
    waitcnt( clkfreq / 3 + cnt )
    outa[18] := 0
    waitcnt( clkfreq / 17 + cnt )
```

SingingDe
Graphic
images
Singing
vocal tr

SingingDemo.spin
StereoSpatializer.s
VocalTract.spin

Propeller Sour

9 : 9 Insert

start p.. F.. P.. P.. 2.. I... P.. 1.. P.. 10:40 AM

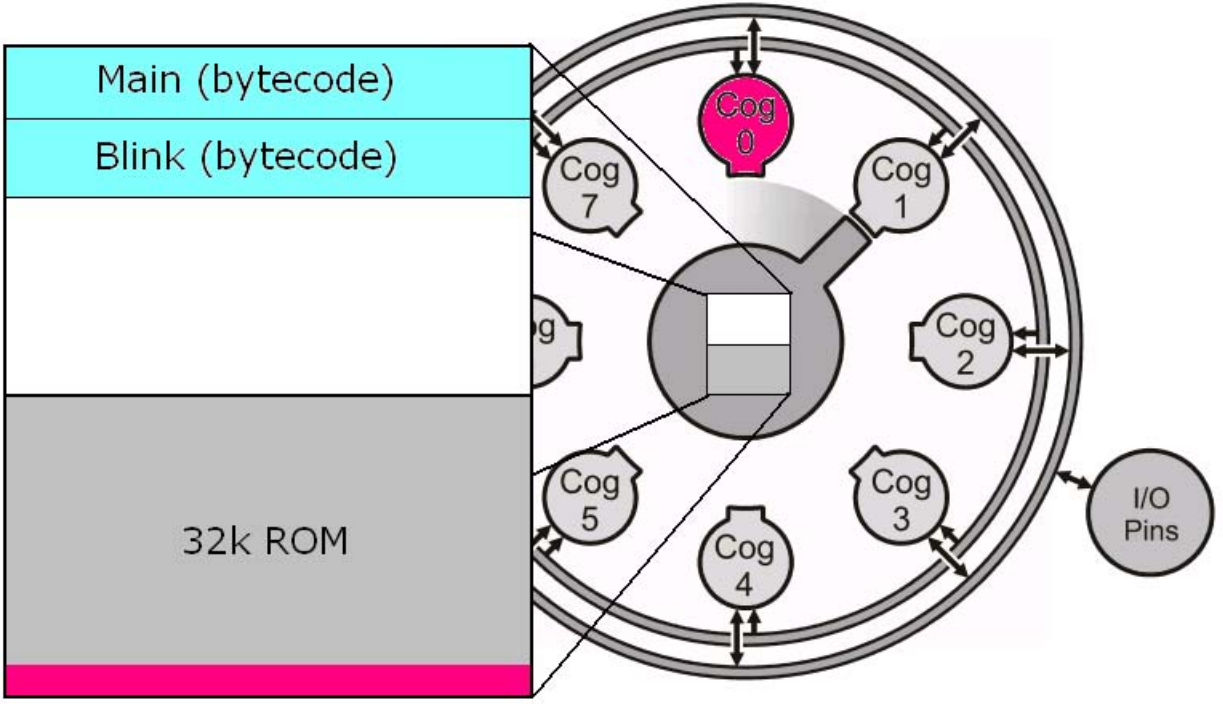
Main (bytecode)
Blink (bytecode)
32k ROM
Cog 0
Cog 1
Cog 2
Cog 3
Cog 4
Cog 5
Cog 7
I/O Pins

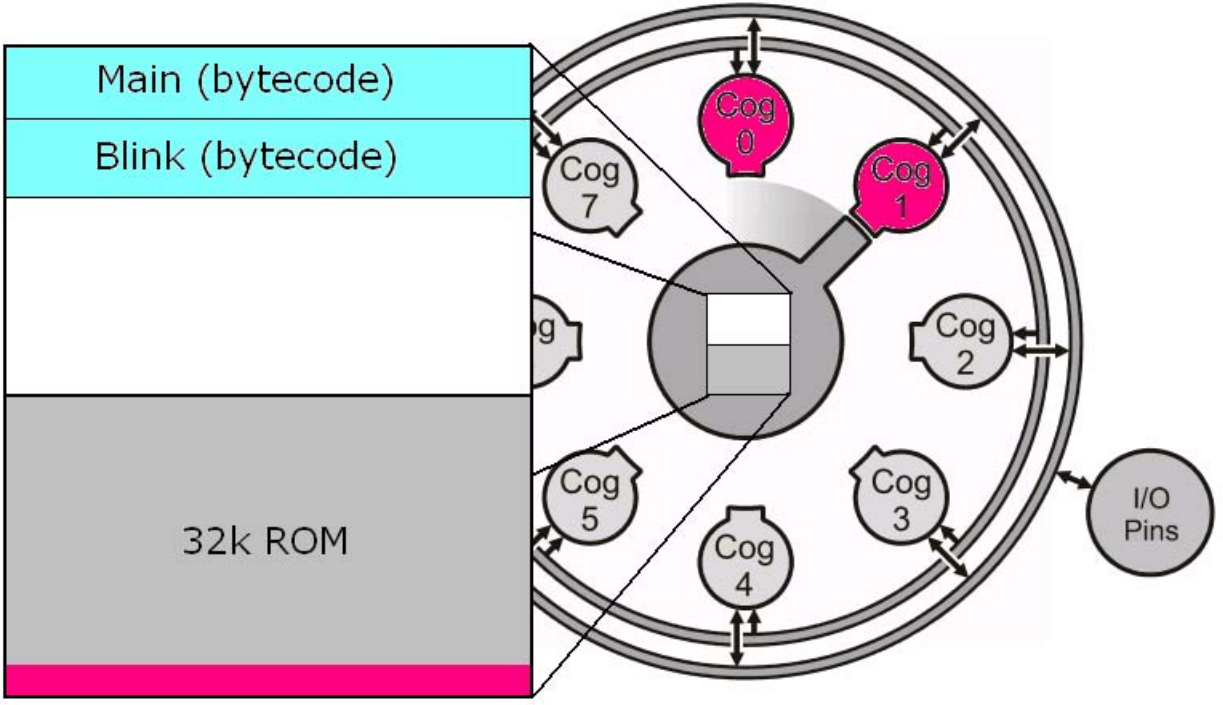
Main (bytecode)
Blink (bytecode)
32k ROM
Cog 0
Cog 1
Cog 2
Cog 3
Cog 4
Cog 5
Cog 7
I/O Pins

Propeller Tool - demo05

File Edit Run Help

SingingDemo
VocalTract [
StereoSpati

demo03 | demo04 | demo05 | demo01 | demo02 | MXD2125 Demo | VocalTractDemo_mama | SingingDemo | Inductor

Full Source | Condensed | Summary | Documentation

```
con
_clkmode = xtal1 + pll16x
_xinfreq = 5_000_000

pub Main

  cognew( @Blink, 0 )            ' run Blink in another cog

  dira[16] := 1
  repeat
    !outa[16]
    waitcnt( clkfreq + cnt )

dat
Blink
                mov       dira, ledbit
                mov       target, cnt
                add       target, delay1
:loop
                mov       outa, ledbit
                waitcnt   target, delay2
                mov       outa, #0
                waitcnt   target, delay1
                jmp       #:loop

ledbit          long      1 << 20
delay1          long      80_000_000 / 10
delay2          long      80_000_000 / 2
target          res       1
```

SingingDe
Graphic
images
Singing
vocal tr
rayman 4

SingingDemo.spin
StereoSpatializer.s
VocalTract.spin

Propeller Sour

8 : 36 | Insert

start | 10:37 AM

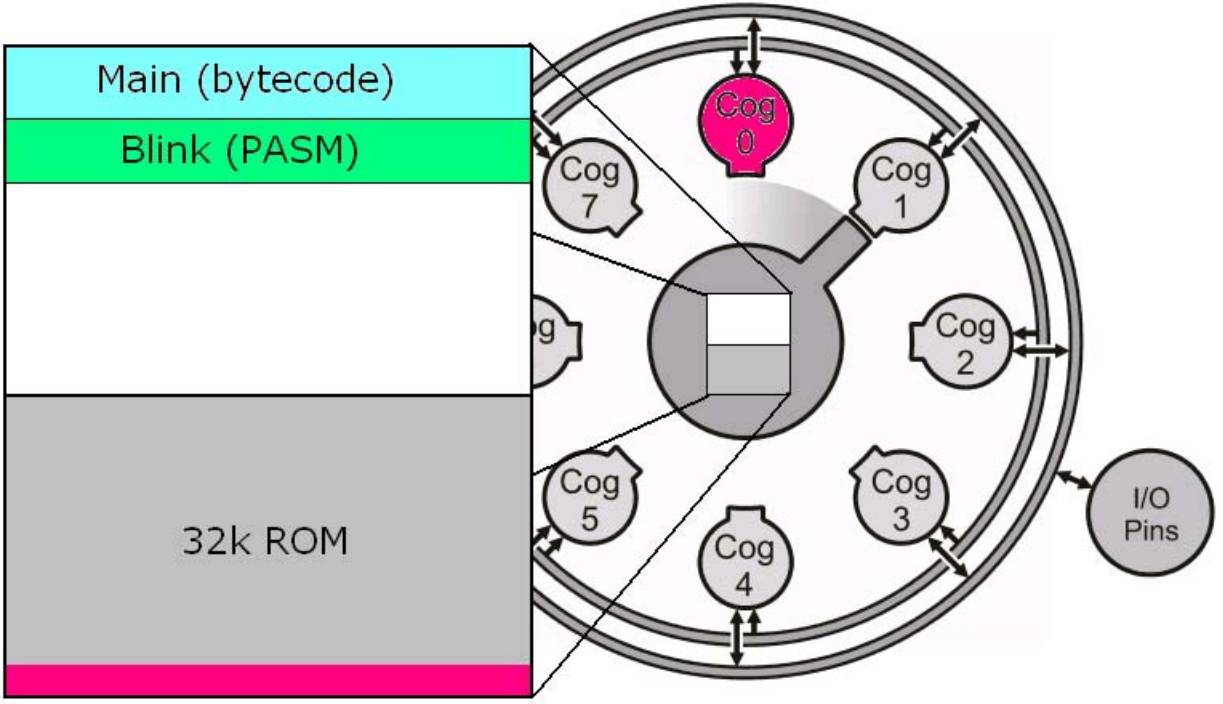
Main (bytecode)
Blink (PASM)
32k ROM
Cog 0
Cog 1
Cog 2
Cog 3
Cog 4
Cog 5
Cog 7
I/O Pins

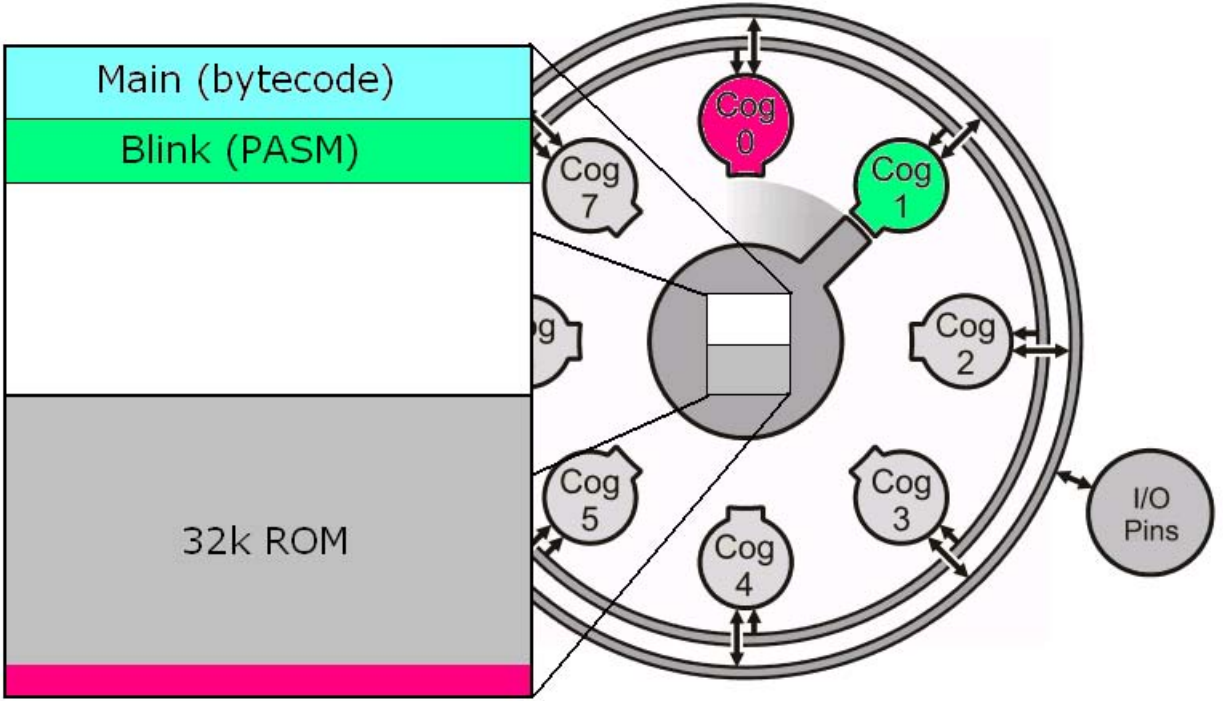
Main (bytecode)
Blink (PASM)
32k ROM
Cog 0
Cog 1
Cog 2
Cog 3
Cog 4
Cog 5
Cog 7
I/O Pins

Object Exchange (OBEX)

Examples: fullduplexserial, tv, graphics, vga, i2c, lcd (hitachi), PID, servos, PS/2 keyboard, PS/2 mouse, floating-point, etc.

Open source: MIT license.

TV Interface

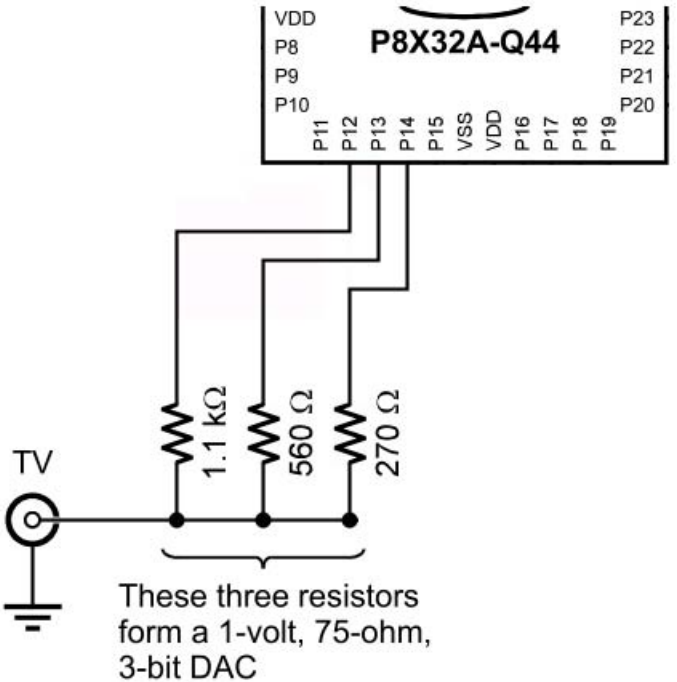

Vocal Tract v1.1	by Chip Gracey	Copyright (c) 2006 Parallax, Inc.	28 October 2006

This object synthesizes a human vocal tract in real-time. It requires one cog and at least 80 MHz.

The vocal tract is controlled via 13 single-byte parameters which must reside in the parent object:

```
VAR byte aa,ga,gp,vp,vr,f1,f2,f3,f4,na,nf,fa,ff     'vocal tract parameters
```

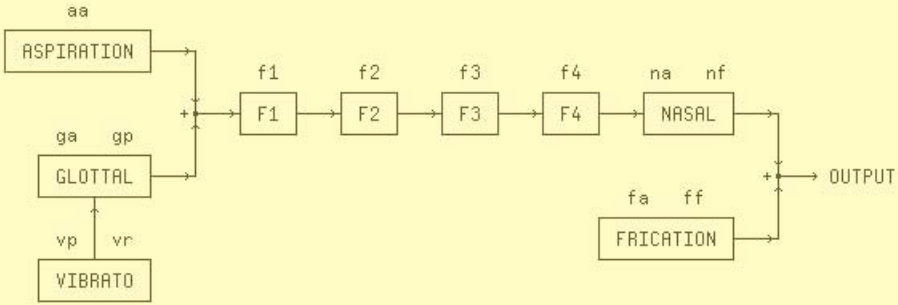

Spin compilers:

- Propeller Tool (Windows)
- BST (Linux/Mac/Windows)
- Sphinx (Propeller)

Other languages:

- C
- PropBASIC
- FORTH

```
when mouse clicked
start on mouse click
repeat
    wait 1000
    toggle pin 18
    set x to IR distance
    if 2*x<100
        found( d )
```

```
found ( d ) locals: n
if object found, drive servo and
speak monster several times
set servo 1 to distance %
set n to d/2
repeat n
    speak monster
return 0
```

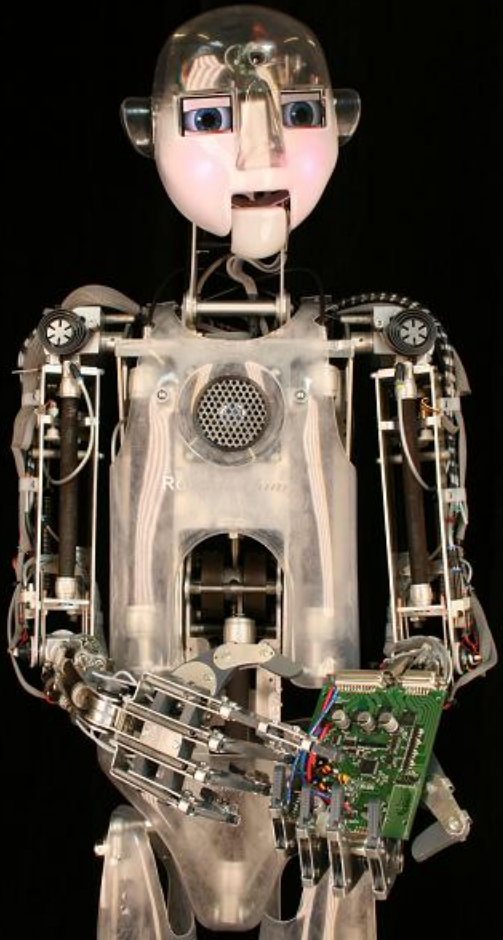

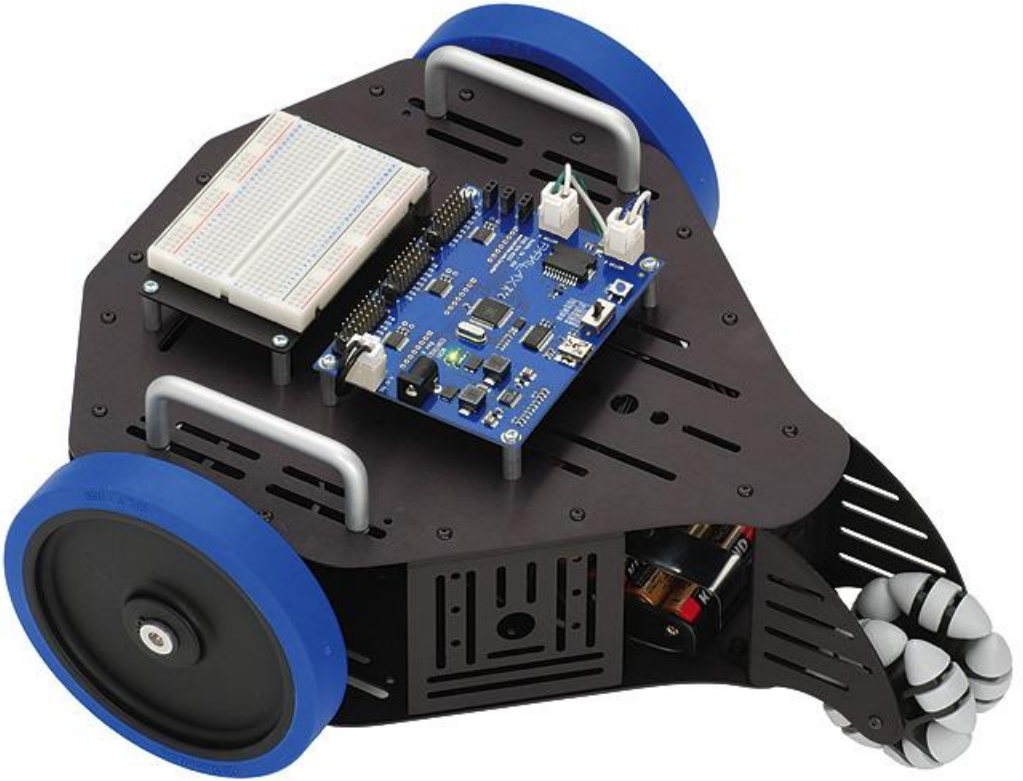

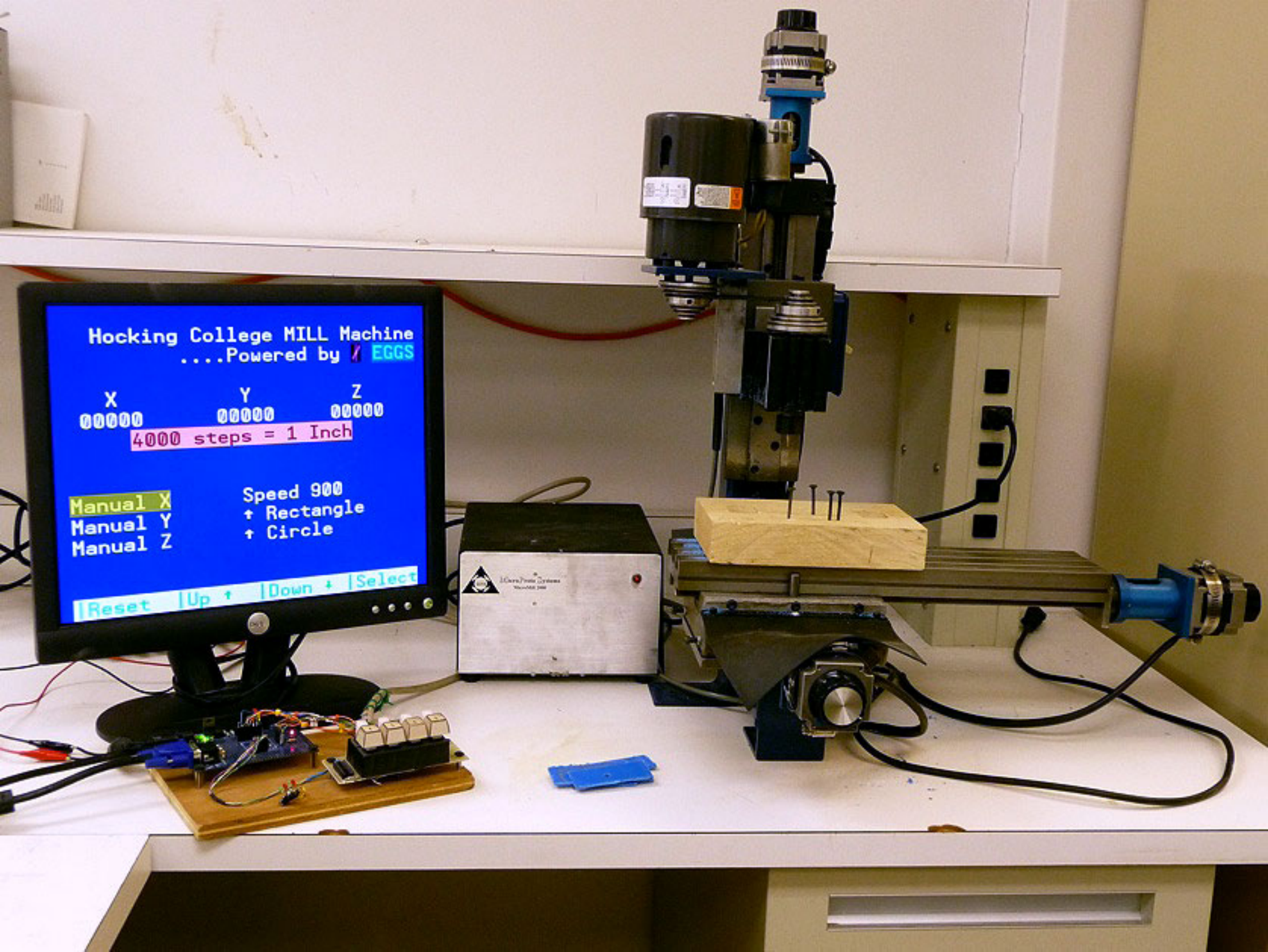
Hocking College MILL Machine
....Powered by EGGS
X
Y
Z
00000
00000
00000
4000 steps = 1 Inch
Manual X
Manual Y
Manual Z
Speed 900
Rectangle
Circle
Reset
Up
Down
Select

Erase
Write
Read
State
Position
Step

OPEN STOMP
COYOTE-1

Retrocomputing

Emulators:

- Z80 (CP/M, TRS-80)
- 8085 (Model 100)
- 6502 (NES)
- SID

www.parallax.com